URhulumente weNtshona Koloni

EzeMfundo

UMGAQO-NKQUBO NEMIGQALISELO YOKHUSELEKO KWISAYENSI ENTSHONA KOLONI

IZIQULATHO **IPHEPHA**

IZIHLOMELO

1. INTSHAYELELO

ISebe leMfundo leNtshona Koloni (iWCED) linoxanduva lokuqinisekisa ukuba ukufundisa kunye nokufunda isayensi ngendlela eyiyo kunokwenziwa kwizikolo zikarhulumente ngaphandle kokubeka engxakini ukuzimisela kwalo kucoceko lokusingqongileyo nokhuseleko lwabafundi, lootitshala nezikolo. ISebe iWCED liyazi ukuba iilebhu zezikolo ziindawo ezingayingozi mpela nokuba ukugcinwa kweekhemikhali kufuneka kube phantsi kolawulo olungqongqo. Liyazi kwakhona ukuba usetyenziso gwenxa lweekhemikhali ezigcinwe ezikolweni kungenzakalisa abafundi noluntu.

Injongo yalo Mgaqo-nkqubo neMigqaliselo yoKhuseleko kwiSayensi yeZikolo kukubonelela ngesikhokelo kwizikolo zikarhulumente ngokhuseleko kwiilabhoratri. Zonke izikolo zikarhulumente zinyanzelekile ukuba zithathe amanyathelo ayimfuneko achazwe kulo mgaqo-nkqubo ukwenzela ukuqinisekisa ukhuseleko nokuthintela usetyenziso gwenxa lweekhemikhali.

2. ISIKHOKELO SEMITHETHO ESETYENZISIWEYO

2.1 UMthetho woMgaqo-nkqubo weMfundo kaZwelonke, 1996 (uMthetho 27 ka-1996)

2.2 UMthetho weZikolo zaseMzantsi Afrika (uMthetho 84 ka-1996)

2.3 UMthetho weMfundo weZikolo zePhondo leNtshona Koloni, 1997 (uMthetho 12 ka-1997)

2.4 INkcazo yoMgaqo-nkqubo weKharityhulam noVavanyo, 2011

2.5 Occupational Health and Safety Act, 1993 (Act 85 of 1993)

2.6 National Environmental Management Act, 1998 (Act 107 of 1998)

2.7 National Environmental Waste Act, 2008 (Act 59 of 2008)

3. ISIKHOKELO SOKHUSELEKO

Lo Mgaqo-nkqubo neMigqaliselo yoKhuseleko ichaza ukuthi-

3.1 abalawuli bezithili zemfundo banoxanduva lokubeka esweni ukusetyenziswa kwalo mgaqo-nkqubo nemigqaliselo kunye nokususwa komphutha weekhemikhali (*chemical waste*) kwisikolo ngasinye;

3.2 iinqununu zezikolo zinoxanduva lokubeka esweni ukuphunyezwa kwalo mgaqo-nkqubo nemigqaliselo;

3.3 isikolo ngasinye sityumba igosa lokhuseleko kwezesayensi;

3.4 umlawuli wesithili semfundo ngasinye sityumba umntu wokubeka esweni ukhuseleko kwezesayensi wangaphandle wokubeka esweni ukwenziwa ngokukhuselekileyo kwemisebenzi yezesayensi ezikolweni;

3.5 izikolo zinikwa iNcwadana yoMgaqo-nkqubo neMigqaliselo yoKhuseleko kwiSayensi eZikolweni *(Safety in School Science Laboratory Manual)* neyinxenye yengxam yomgaqo-nkqubo nemigqaliselo (*integral part of the policy and protocol*); nokuba

3.6 izikolo ziqinisekisa ukuthotyelwa nokulandelwa kwaleNcwadana yoMgaqo-nkqubo neMigqaliselo yoKhuseleko kwiSayensi eZikolweni maxa onke; yaye le ncwadana yemigaqo inezi zinto, phakathi kwezinye:

3.6.1 imisebenzi noxanduva lwenqununu, Igosa lezokhuseleko kwisayensi esikolweni, umntu wangaphandle wokubeka esweni ukhuseleko kwezesayensi ezikolwen, nootitshala nabafundi besayensi;

3.6.2 imizekelo yeekhemikhali eziyingozi neziphumo zokusebenza kwazo (*reactions)*;

3.6.3 imiqathango ekusetyenzisweni kweekhemikhali eziyingozi nokwenziwa kweziphumo zekhemikhali eziyingozi zakuba zisetyenzisiwe (*chemical reactions*), kunye nokusetyenziswa kwezixhobo zesayensi ezingozenzele (*makeshift apparatus*).

3.6.4 imiyalelo malunga neendlela emazigcinwe ngayo iikhemikhali; kunye

3.6.5 neendlela okungathi ngazo kwenziwe ungabi yongozi umphutha weekhemikhali kunye nenkqubo emayisetyenziswe yokulahlwa kweekhemikhali ezilolu hlobo.

4. UTYUNJWA KWEGOSA LOKHUSELEKO KWISAYENSI ESIKOLWENI

4.1 Inqununu yesikolo mayityumbe, ngencwadi ebhaliweyo, oyena titshala unamava wesayensi njengegosa lokhuseleko kwisayensi esikolweni.

4.2 Akukho sikolo masenze ii-eksperimenti okanye nayiphi na imisebenzi efuna kusetyenziswe iikhemikhali nezixhobo zesayensi kungakhange kutyunjwe igosa lokhuseleko kwisayensi esikolweni.

4.3 Xa lingekho igosa lokhuseleko kwisayensi esikolweni elityunjiweyo, kufuneka kubekho igosa lokhuseleko kwisayensi esikolweni elibambeleyo.

5. UKHUSELEKO KWIILABHORATRI ZESAYENSI EZIKOLWENI

5.1 Imisebenzi yegosa lokhuseleko kwezesayensi

Imisebenzi yegosa lokhuseleko kwisayensi esikolweni yile-

5.1.1 kukuqulunqa umgaqo-nkqubo wesikolo wokhuseleko kwisayensi, ngokungqinelana nalo mgaqo-nkqubo nemigqaliselo kunye nencwadana yemigaqo (*manual*).

5.1.2 kukugcina umphutha weekhemikhali (*chemical waste*) kwizikhongozeli ezifanelekileyo ezifakwe kwindawo efanelekileyo ebekelwe oko esikolweni apho ungayi kuba yingozi;

5.1.3 kukulahla iikhemikhali ezithile ngokungqinelana nenkqubo ecaciswe kwincwadana yemigaqo (*manual*);

5.1.4 kukwenza ithayimthebhile yokusetyenziswa kwelabhoratri ngootitshala nabafundi;

5.1.5 kukukhupha iikhemikhali eziwiselwe imiqathango nezinye iikhemikhali lizinike ootitshala nokugcina irekhodi yeekhemikhali ezilolu hlobo;

5.1.6 kukuqinisekisa ukuba iikhemikhali zisetyenziswa, zigcinwe yaye zicwangciswe ngendlela emiselweyo kwincwadi yemigaqo nethi iqinisekise ukhuseleko.

5.1.7 kukuqhuba uqeqesho nophuhliso lootitshala besayensi apho esikolweni ngemiba ephathelele kukhuseleko kwezesayensi;

5.1.8 kukuqinisekisa ukuba ilabhoratri yesayensi isetyenziswa, ilawulwa kwaye igcinwe ikwimeko eqinisekisa ngokhuseleko nokuhlolwa qho ngeveki;

5.1.9 kukunika ingxelo ngoko nangoko kwinqununu ngayo nayiphi na imibandela eyingozi okanye enokukhokelela engozini;

5.1.10 kukugcina uluhlu lwazo zonke iikhemikhali eziwiselwe imiqathango ngokwamagama nobungakanani bazo nokuluhlaziya olu luhlu qho ngekota;

5.1.11. kukuqinisekisa ukuba iimpawu zokhuseleko zixhonyiwe elabhoratri nokuba iikhemikhali eziyingozi zifakwe iilebhile;

5.1.12 kuku-odola iikhemikhali eziyimfuneko ekufundiseni isayensi; kunye

5.1.13 nokuqulunqa umgaqo wokuziphatha ofunekayo wabafundi nootitshala besayensi ukuqinisekisa ukhuseleko.

5.2 Umsebenzi noxanduva lootitshala abasebenzisa ilabhoratri neekhemikhali

Umsebenzi noxanduva lootitshala abasebenzisa ilabhoratri neekhemikhali, phakathi kweminye, yile ilandelayo:

5.2.1 Kukubanentsebenziswano negosa lokhuseleko kwisayensi esikolweni.

5.2.2 Kukwazi yaye basebenzise lo mgaqo-nkqubo nemigqaliselo kwakunye nencwadana yemigaqo.

5.2.3 Kukuqinisekisa ukuba abafundi abasebenzisa ilabhoratri balandela umgaqo wokuziphatha ofanelekileyo ukuqiniseka ukhuseleko.

5.2.4 Kukuqinisekisa ukuba abafundi abashiywa bodwa elabhoratri kungekho mntu ubabeke esweni.

5.2.5 Kukucima igesi ekupheleni kwesifundo.

5.2.6 Kukutshixela zonke iikhemikhali yaye baqinisekise ukuba akukho khemikhali zibekwe nje naphi na elabhoratri.

5.2.7 Kukutshixa ucango lwaselabhoratri ngamaxesha okuphumla (*breaks*) naxa ingasetyenziswa ilabhoratri.

5.2.8 Kukugcina iikhemikhali eziyingozi zitshixelwe xa zingasetyenziswa.

5.2.9 Kukufundisa abafundi ngeengozi ezibangelwa ziikhemikhali nangamanyathelo okhuseleko ekufuneka athathwe phambi kokuba abafundi baphathe iikhemikhali eziyingozi kunye/okanye kwenzeke iziphumo zokusetyenziswa kwazo eziyingozi.

5.2.10 Kukuqinisekisa ukuba abafundi abavunyelwa benze ezo zinto ezithi, ngokweNkcazo yoMgaqo-nkqubo weKharityhulam noVavanyo (CAPS), kufuneke zibonisiwe ngutitshala.

5.2.11 Kukuqinisekisa ukuba iikhemikhali azikhutshwa elabhoratri ngaphandle kwemvume yegosa lokhuseleko kwisayensi esikolweni.

5.2.12 Kukusebenzisa iikhemikhali kuphela ukulungiselela iinjongo ezimiselwe kwiCAPS.

5.2.13 Kukusebenzisa kuphela ezo khemikhali zivunywe ligosa lokhuseleko kwisayensi esikolweni.

5.2.14 Kukubuyisela iikhemikhali emva kokuzisebenzisa kwiindawo zazo zokuzigcina esitoreni.

5.2.15 Kukuphatha ngokukhuselekileyo nangenyameko iikhemikhaki eziyingozi nezinezinto ezizenzayo zakusetyenziswa.

5.2.16 Kukuxelela igosa lokhuseleko ngayo nayiphi na into eyingozi okanye engabangela ingozi.

5.2.17 Kukuvumela abafundi bajoje, bangcamle yaye baphathe iikhemikhali kuphela xa bephantsi kweliso lobagadileyo.

5.3 Uxanduva lwabafundi abasebenzisa ilabhoratri yesayensi

Ukwenzela ukuba igosa lokhuseleko kwisayensi esikolweni lenze umsebenzi walo, intsebenziswano yabafundi ibaluleke kakhulu. Imisebenzi noxanduva lwabafundi abasebenzisa ilabhoratri yesayensi imi ngolu hlobo lulandelayo:

Kufuneka abafundi -

5.3.1 bawazi yaye bawulandele ngqo lo mgaqo-nkqubo nemigqaliselo kwakunye nencwadana yemigaqo;

5.3.2 basebenzisane notitshala osemsebenzini kunye negosa lokhuseleko kwisayensi esikolweni ukuqinisekisa ukhuseleko ngalo lonke ixesha; yaye

5.3.3 balandele indlela yokuziphatha ebekwe ligosa lokhuseleko kwisayensi esikolweni.

6 UKUTYUNJWA KOMNTU WOKUBEKA ESWENI UKHUSELEKO KWISAYENSI WANGAPHANDLE

6.1 Ngamnye umlawuli wesithili semfundo makatyumbe, ngencwadi ebhaliweyo, igosa lesithili elona linamava nolwazi ekufindiseni isayensi njengomntu wokubeka esweni ukhuseleko kwisayensi wangaphandle.

6.2 Xa engekho umntu wokubeka esweni ukhuseleko kwisayensi wangaphandle, kufuneka kubekho obambele lowo wokubeka esweni ukhuseleko kwisayensi wangaphandle.

6.3 Akukho sikolo masenze ii-eksperimenti okanye nayiphi na imisebenzi efuna kusetyenziswe iikhemikhali nezixhobo kungakhange kutyunjwe umntu wokubeka esweni ukhuseleko kwisayensi wangaphandle.

7 IMISEBENZI YOMNTU OBEKE ESWENI UKHUSELEKO KWISAYENSI WANGAPHANDLE

Umntu obeke esweni ukhuseleko kwisayensi wangaphandle kufuneka -

7.1 aqinisekise ukuba isikolo ngasinye esifundisa isayensi kwisithili semfundo sisebenzisa ukhuseleko ngokwalo mgaqo-nkqubo nemigqaliselo kunye nencwadana yemigaqo (*manual*), phambi kokuba kuthiwe iilabhoratri zabo ziindawo ezikhuselekileyo.

7.2 anike ingxelo qho kumlawuli wesithili semfundo ochaphazelekayo, oko akwenze ngokuqala adlule kumcebisi ngezekharityhulam oyintloko, malunga nemeko yokhuseleko lwelabhoratri zesayensi kwizikolo zesithili semfundo; yaye

7.3 aqeqeshe amagosa okhuseleko kwisayensi ezikolweni ngemiba yezokhuseleko.

8. IIKHEMIKHALI EZIWISELWE IMIQATHANGO

8.1 Uluhlu lweekhemikhali eziyingozi olwanikwa izikolo luvele **kwisiHlomelo A.**

8.2 Ukusetyenziswa kwezi khemikhali kuphelele ekusetyenzisweni njengoko kumiselwe kwi-CAPS.

8.3 Xa kusetyenziswa iikhemikhali eziwiselwe imiqathango, makuthathwe amanyathelo ongezelelweyo okulumkela ingozi ukuqinisekisa ukhuseleko.

8.4 Ngaphandle kokuba kucaciswe ngandlela yimbi kwi-CAPS, akuvumelekanga ukuba abafundi baziphathe ngokwabo ezi khemikhali ziwiselwe imiqathango yaye kuphela ngootitshala amabenzele abafundi imiboniso ngazo kunye nezo zinto zizenzayo ezi khemikhali zakusetyenziswa.

8.5 Ootitshala abafuna ukusebenzisa iikhemikhali eziwiselwe imiqathango mabaxelele igosa lokhuseleko kwisayensi esikolweni kwangaphambili nekuya kuba lilo eliya kuzikhupha libanike ezo khemikhali.

8.6 Inkqubo ekhankanywe ku-8.5 apha ngentla kufuneka ibe yecwangciswe kakuhle ukwenzela ukuba ingaphazamisi ukufunda nokufundisa.

8.7 Zonke iikhemikhali eziyingozi mazibe neelebhile ezibonakala ngokucacileyo neempawu ezifanelekileyo ezilumkisayo.

9. IMIQATHANGO EWISELWE UKUBONISWA (*DEMONSTRATIONS*) KWEZIPHUMO ZOKUSETYENZISWA KWEEKHEMIKHALI (*CHEMICAL REACTIONS*)

9.1 Uluhlu lweekhemikhali ezinikwa izikolo nezithi zikhuphe iziveliso eziyingozi zakutshiswa okanye zakudibana nezinye izinto, lunikwe **kwisiHlomelo B**.

9.2 Ukuboniswa kwezinto ezenzekayo zakusetyenziswa ezi khemikhali kuphelele kuphela koko kumiselwe kwi-CAPS.

9.3 Xa kusenziwa le miboniso (*demonstrations*), makuthathwe amanyathelo ongezelelweyo okulumkela ingozi ukuqinisekisa ukhuseleko.

9.4 Ngaphandle kokuba kucaciswe ngandlela yimbi kwi-CAPS, akuvumelekile ukuba abafundi ngokwabo bavelise ezi ziveliso ziyingozi. Kuphela ngootitshala amababonise abafundi ukuveliswa kwezi ziveliso.

10. UKUGCINWA KWEEKHEMIKHALI

10.1 Iikhemikhali ezingafakwanga kuluhlu kwiNkcazo yoMgaqo-nkqubo weKharityhulam noVavanyo okanye ezinganikwanga izikolo liSebe iWCED

10.1.1 Igosa lokhuseleko kwisayensi esikolweni liya kwenza uluhlu lwazo zonke iikhemikhali, nokuba ngaba zikho kwi-*stock* okanye zisandula kuthengwa, kunye nenjongo eziza kusetyenziselwa yona.

10.1.2 Olu luhlu malungeniswe qho ngekota kumntu obeke esweni ukhuseleko kwisayensi wangaphandle.

10.1.3 Umntu obeke esweni ukhuseleko kwisayensi wangaphandle uya kuthintela ukugcinwa kunye/okanye ukusetyenziswa kwazo naziphi na iikhemikhali ezithathwa ngokuba azingqinelani nomgaqo-nkqubo nemigqaliselo kunye nencwadana yemigaqo (*manual*).

10.2 iikhemikhali ezingahambelaniyo nezinye

10.2.1 Iikhemikhali ezingahambelaniyo nezinye ziikhemikhali ezinokuthi xa zisendaweni enye nezinye zidale iingozi.

10.2.2 Iikhemikhali ezingahambelaniyo nezinye mazigcinwe ngeendlela ezenza kube lula ukufumaneka nezenza zingabinakwenza zingozi.

10.2.3 Iikhemikhali ezingahambelaniyo akufuneki zigcinwe zimiswe nkqo okanye zilaliswe ngecala ezishelifini. Uluhlu lwezi khemikhali zingahambelaniyo nezinye lunikwe **kwiziHlomelo C no-D.**

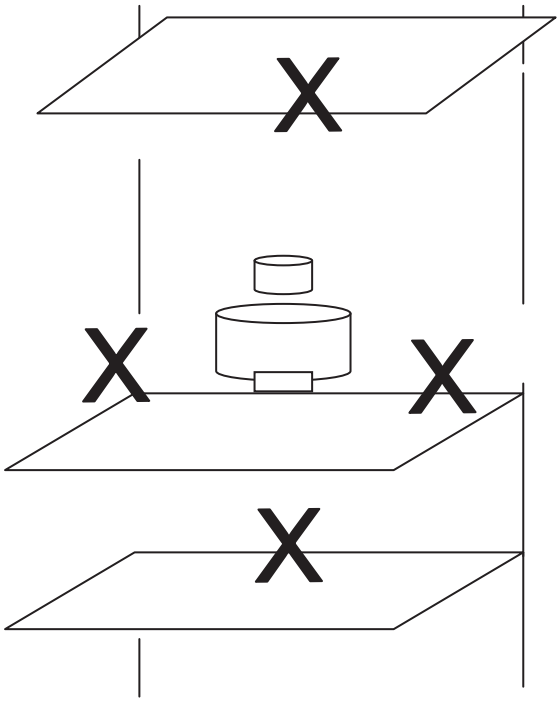

u **x** ubonisa iindawo

iikhemikhali ezingahambelaniyo nezinye emazingabekwa kuzo.

10.2.4 Iikhemikhali mazigcinwe kwigumbi elahlukileyo ingabililo elo linezixhobo ze-*physics*.

10.2.5 Izikhongozeli ezikhulu ezineekhemikhali kufuneka zigcinwe zibekwe phezu komgangatho.

10.2.6 Makungabikho miphunga iyingozi (*hazardous vapours*) kwigumbi elisisitora lefiziksi okanye lekhemistri.

11. UKULAHLWA KOMPHUTHA WEEKHEMIKHALI (*DISPOSAL OF CHEMICAL WASTE*)

Ngasinye isithili semfundo sinoxanduva lokususa nokulahla umphutha wekhemikhali ezikolweni. Umgaqo-nkqubo wokhuseleko kwisayensi esikolweni kufuneka wenze amalungiselelo –

11.1 enkqubo emayilandelwe yokulahlwa komphutha weekhemikhali;

11.2 okwahlulwa kweekhemikhali ukwenzela ukuqinisekisa ukuba umphutha weekhemikhali kwinkqubo nganye ethile (*from each specific process*) ugcinwa ngokwahlukeneyo;

11.3 okugcinwa komphutha kwizikhongozeli ezenziwe ngento ehambelanayo nawo; kunye

11.4 nawokulahlwa komphutha weekhemikhali kuphela kwiindawo ezivunywe ngumasipala

12. IINKUBO EMAZILANDELWE NGEXESHA LIKAXAKEKA

12.1 Ubusela

12.1.1 Zonke iziganeko zobusela mazixelwe ngoko nangoko kwigosa lokhuseleko kwisayensi esikolweni, neliya kuthi lona lixelele inqununu nesithili esichaphazelekayo

oko likwenza ngokudlula kuqala kumntu obeke esweni ukhuseleko kwezesayensi wangaphandle.

12.1.2 Igosa lokhuseleko kwisayensi esikolweni malibhale ingxelo ngesiganeko sobusela eso lize linike iikopi zayo inqununu yesikolo nomntu obeke esweni ukhuseleko kwisayensi wangaphandle.

12.1.3 Inqununu yesikolo iya kusixela emapoliseni akufutshane eso siganeko, ize ivule ityala ngenjongo yophando.

12.1.4 Ukuba kuyimfuneko, umntu obeke esweni ukhuseleko kwisayensi wangaphandle uya kuza kuhlola okwenzekileyo apho kwiziko lemfundo aze anike ingxelo yolu hlolo kwiNtloko yoQuquzelelo neNgcebiso yezekharityhulam kwi-ofisi yesithili semfundo.

12.1.5 Kuzo zonke izenzo zobusela, isikolo kunye ne-ofisi yesithili esichaphazelekayo kufuneka zifayilishe iingxelo zize zixelele icandelo lekharityhulam elichaphazelekayo kwaNdlunkulu ukuze lihlale likwazi okuqhubekayo.

12.2 Ukwenzakala neengozi ezenzeka elabhoratri

12.2.1 Iziganeko zokwenzakala mazixelwe ngoko nangoko kwinqununu ngokuthi kwaziswe ligosa lokhuseleko kwisayensi esikolweni.

12.2.2 Inqununu mayazise ngoko nangoko abazali babafundi abachaphazelekayo kunye/okanye indoda/umfazi okanye usapho lotitshala ochaphazelekayo.

12.2.3 Wakuba waziwe unobangela wokwenzakala, utitshala onguye osemsebenzini makenze uncedo lokuqala elandela imigaqo ekwincwadana yemigaqo (*manual*) malunga nonyango lwaloo ngozi.

12.2.4 Kwiimeko zeengozi ezimasikizi, umntu owenzakeleyo makasiwe esibhedlele.

12.2.5 Kwimeko yengozi enkulu enjengemililo engalawulekiyo makuphunywe ngokukhawuleza elabhoratri kuze kwaziswe umasipala waloo ndawo ochaphazelekayo ukwenzela ukuyifaka phantsi kolawulo loo meko.

12.2.6 Igosa lokhuseleko kwisayensi esikolweni malingenise ingxelo ebhaliweyo ngesiganeko eso kummntu obeke esweni ukhuseleko kwisayensi wangaphandle.

12.2.7 Isikolo kunye ne-ofisi yesithili semfundo esichaphazelekayo mazigcine efayilini ikopi yale ngxelo.

12.2.8 Ilabhoratri nganye mayixhotyiswe ngekhithi yezixhobo zoncedo lokuqala, isicima-mlilo, kunye nezinye izixhobo zokhuseleko, ngokungqinelana neemfuno ezimiselweyo kwincwadana yemigaqo.

12.2.9 Isikolo kunye nesithili semfundo esichaphazelekayo mazifake efayilini iingxelo ngazo zonke iziganeko zokwenzakala neengozi yaye zixelele icandelo lekharityhulam elichaphazelekayo kwaNdlunkulu ukuze lihlale likwazi okuqhubekayo.

13. UQEQESHO

13.1 Amagosa okhuseleko kwisayensi esikolweni makaqeqeshe ootitshala besayensi ngokhuseleko kwisayensi esikolweni.

13.2 Umntu obeke esweni ukhuseleko kwisayensi wangaphandle wesithili semfundo makaqeqeshe amagosa okhuseleko kwisayensi esikolweni amatsha ingekapheli inyanga enye yokuqalisa kwawo imisebenzi yawo.

13.3 Umntu obeke esweni ukhuseleko kwisayensi wangaphandle makaqeqeshe amagosa okhuseleko kwisayensi amatsha ezikolweni apho isayensi isandula kuqaliswa kwikharityhulam.

14. INCWADANA YEMIGAQO YOKHUSELEKO KWILABHORATRI YESAYENSI ESIKOLWENI

14.1 ISebe iWCED lithumele kuzo zonke izikolo iNcwadana yeMigaqo yoKhuseleko kwiLabhoratri yeSayensi eSikolweni (*Manual on Safety in the School Science Laboratory*), kwakunye neNgcaciso eMfutshane yoPhuhliso lweKharityhulam *No. 0057/2007* (*Curriculum Development Minute No. 0057/2007)*.

14.2 Le ncwadana yemigaqo mayisoloko ikho ngokusisigxina kwilabhoratri yeefizikhali sayensi (*physical sciences*) okanye yeesayensi zendalo (*natural sciences*), ibekwindawo apho inokufumaneka ngokulula

14.3 Iikopi zale ncwadana yemigaqo zingafumaneka kwa-Edumedia.

15. IZENZO EZITHINTELWEYO (*PROHIBITED PRACTICES*)

15.1 Ukusetyenziswa kwezixhobo ezingozenzele (*makeshift apparatus*) kuthintelwe ngokungqongqo (*is strictly prohibited*).

15.2 Azivumelekanga izikolo ukuba zigcine naziphi na iikhemikhali ezingafakwanga kuluhlu kuMgaqo-nkqubo neMigqaliselo yoKhuseleko kwiSayensi eSikolweni **(***Policy and Protocol on Safety in School Science)*.

ISIHLOMELO A

ULUHLU LWEEKHEMIKHALI EZIWISELWE IMIQATHANGO (*LIST OF RESTRICTED CHEMICALS*)

Key:

E = *Explosive [has tendency to explode]*

F = *Flammable [can be set on fire]*

T = *Toxic [poisonous]*

M = *Mutagen [causes mutation in an organism]*

O = *Oxidant [promotes oxidation or burning]*

C = *Corrosive [eats away by chemical reaction]*

I = *Irritant [causes irritation to skin or eyes, etc.]*

HC = *Human carcinogen [causes cancer in humans]*

PHC = *Probable human carcinogen [probably causes human cancer]*

CHEMICALS	Explosive	Oxidant	Flammable	Corrosive	Toxic	Irritant	Mutagen	Carcinoge
Acetic acid				*C*				
Aluminium chloride				*C*				
Aluminium powder	*E*				*T*			
Ammonia					*T*	*I*		
Ammonium dichromate	*E*			*C*	*T*	*I*	*M*	
Ammonium nitrate	*E*							
Ammonium thiocyanate					*T*			
Barium chloride					*T*			
Barium hydroxide					*T*			
Benzene			*F*		*T*			*HC*
Bromine				*C*		*I*		
Butanol			*F*		*T*			
Carbon (graphite)						*I*		
Carbon disulphide	*E*		*F*					

Carbon tetrachloride					*T*	*I*		*PHC*
Charcoal			*F*					
Chlorine				*C*	*T*	*I*		
Chloroform					*T*			*PHC*
Copper carbonate						*I*		
Copper carbonate						*I*		
Copper chloride						*I*		
Copper nitrate	*E*				*T*	*I*		
Copper oxide						*I*		
Copper sulphate						*I*		
Cyclohexane			*F*			*I*		
Cyclohexene			*F*			*I*		
Decanedioyl dichloride					*T*			
Ethanoic acid			*F*			*I*		
Ethanol			*F*					
Ether		*E*	*F*					
Ether (diethyl ether)			*F*					
Ethyl ethanoate			*F*					
Hydrochloric acid				*C*	*T*	*I*		
Hydrogen gas		*E*	*F*					
Hydrogen peroxide (30%)				*C*		*I*		

Hydrogen sulphide			*F*		*T*	*I*		
Indigo carmine							*M*	
Iodine vapour				*C*		*I*		
Iodine crystals				*C*		*I*		
Iron (III) chloride						*I*		
Lead (II) oxide					*T*			
Lead acetate					*T*			
Lead bromide					*T*			
Lead carbonate					*T*	*I*		
Lead nitrate					*T*			
Lead sulphide					*T*			
Liquid petroleum gas		*E*	*F*					
Lithium		*E*		*C*				
Lithium chloride				*C*				
Lithium hydroxide				*C*				
Magnesium			*F*					
Mercuric oxide					*T*			
Mercury					*T*			
Mercury nitrate					*T*			
Methanol			*F*		*T*			
Methylated spirits			*F*					

Methanoic acid (formic acid)			*F*			*I*		
Methanal (formalin)			*F*			*I*		
Naphthalene			*F*			*I*		
Nickel								*PHC*
Nitric acid		*O*				*I*		
Oxalic acid				*C*				
Oxygen gas		*O*						
Phenolphthalein						*I*		
Phosphorous (white)				*C*	*T*			
Phosphorous pentoxide				*C*	*T*			
Phosphorous red			*F*					
Phosphorous yellow			*F*	*C*				
Potassium	*E*			*C*				
Potassium carbonate								
Potassium chlorate		*O*			*T*	*I*		
Potassium dichromate				*C*				*HC*
Potassium hydroxide				*C*		*I*		
Potassium permanganate	*E*					*I*	*M*	
Propanone (acetone)			*F*		*T*	*I*		
Silver nitrate				*C*			*M*	
Soda lime				*C*				

Sodium				*C*				
Sodium hydroxide				*C*		*I*		
Sodium hypochlorite				*C*		*I*		
Sodium nitrate							*M*	
Sodium nitrite	*E*	*O*					*M*	
Sodium peroxide					*T*			
Sodium sulphide						*I*		
Sulphur			*F*					
Sulphuric acid				*C*				
Turpentine			*F*			*I*		

ISIHLOMELO B

CHEMICALS WHICH PRODUCE HAZARDOUS PRODUCTS WHEN HEATED OR WHEN REACTING WITH OTHER SUBSTANCES

CHEMICALS	***DESCRIPTION OF THE REACTION AND HAZARD***
Acids	*They produce heat and hydrogen gas that can explode when they react with metals. They produce heat when water is added. Violent reactions take place when acid is*

	added to water and hot acid is released.
Alkali metals (Group I)and alkaline earth metals (Group II)	They react vigorously with water to release much heat and hydrogen gas, which can explode. Most of these metals burn in oxygen or air.
Ammonium nitrate	It forms hazardous mixtures with acids, chlorates, flammable liquids and finely divided materials.
Ammonium thiocyanate	When heated above 170 °C, it can release fumes containing cyanides
Bleaching powder	It emits poisonous chlorine gas when it is dissolved in water. It explodes when heated above 100 °C. It emits toxic and possibly explosive fumes if acid is added to it.
Calcium metal	Calcium oxide (quicklime) fumes are emitted from burning calcium.
Calcium carbide	It forms ethyne (acetylene) when it is mixed with water.
Calcium oxide	It produces much heat when it reacts with water, steam, acids or acid fumes.
Carbon (graphite)	If burnt, it can explode.
Carbon disulphide	Like most flammable gases, it forms an explosive mixture with air.
Ethyne (acetylene)	When ignited in the presence of oxygen, it forms an explosive reaction, releasing much heat.
Potassium chlorate	It can explode violently if carbon or organic compounds are added, or when other impurities, such as dust, are present when it is heated.
Potassium hydroxide	It produces heat when it is added to water.

Silver nitrate	*It forms an explosive mixture with magnesium powder.*
Sodium hypochlorite	*It reacts with acids to form poisonous chlorine gas. It also releases chlorine gas when it is heated.*
Sodium hydroxide	*It produces heat when it is added to water.*
Sodium nitrite	*It explodes when heated in the vicinity of 500 °C. It can form explosive mixtures with ammonium salts and thiosulphates.*
Sodium peroxide	*It reacts violently with water.*
Sulphur	*It produces toxic sulphur dioxide when it is heated in oxygen. It forms explosive mixtures with zinc and magnesium powder, and with chlorates and other oxidants.*
Zinc powder	*It is explosive. It forms an explosive mixture with sulphur.*

ISIHLOMELO C

INCOMPATIBLE CHEMICALS [General]

The pairs below are general examples of incompatible materials:

Oxidising agents ***and*** ***flammables***

Oxidising agents ***and*** ***reducing agents***

Acids	***and***	***bases***
Acids	***and***	***sulphides***
Acids	***and***	***flammables***
Acids	***and***	***chlorine compounds***
Acids	***and***	***alcohols***
Acids	***and***	***elemental metals***
Water	***and***	***Groups I and II elements***
Water or air reactives	***and***	***anything***
Organic peroxides	***and***	***anything***

INCOMPATIBLE CHEMICALS [Specific]

Specific examples of incompatible chemicals are given in the table below.

(Adapted from *Safety in Academic Chemistry Laboratories:* American Chemical Society)

CHEMICAL	***INCOMPATIBLE WITH***
Acetic acid	*Nitric acid, hydroxyl compounds, peroxides, permanganates*
Acetylene	*Chlorine, bromine, copper, fluorine, silver, mercury*
Acetone	*Concentrated nitric acid and sulphuric acid mixtures*
Alkali and alkaline earth metals (Groups I and II elements] e.g. potassium, lithium, sodium, calcium, magnesium and aluminium powder	*Water, carbon tetrachloride or other chlorinated hydrocarbons, carbon dioxide, halogens*
Ammonia (anhydrous)	*Mercury, chlorine, calcium hypochlorite, iodine, bromine, anhydrous hydrofluoric acid*
Ammonium nitrate	*Acids, powdered metals, flammable liquids, chlorates, nitrites, sulphur, finely divided organic combustible materials*
Bromine	*Ammonia, acetylene, butadiene, butane, methane, propane (or other petroleum gases), hydrogen, sodium carbide, benzene, metals, turpentine*

Calcium oxide	*Water*
Carbon (activated)	*Calcium hypochlorite, all oxidising agents*
Carbon tetrachloride	*Sodium*
Chlorates	*Ammonium salts, acids, powdered metals, sulphur, finely divided organic or combustible materials*
Chlorine	*Ammonia, acetylene, butadiene, butane, methane, propane (or other petroleum gases), hydrogen, sodium carbide, benzene, finely divided metals, turpentine*
Copper	*Acetylene, hydrogen peroxide*
Flammable liquids	*Ammonium nitrate, hydrogen peroxide, nitric acid, sodium peroxide, halogens*
Fluorine	*All other chemicals*
Hydrocarbons, e.g. butane, propane, benzene	*Fluorine, chlorine, bromine, sodium peroxide*
Hydrofluoric acid (anhydrous)	*Ammonia (aqueous or anhydrous)*
Hydrogen peroxide	*Copper, iron, most metals or their salts, alcohols, acetone, organic materials, combustible materials*
Hydrogen sulphide	*Fuming nitric acid, oxidising gases*
Hypochlorites	*Acids, activated carbon*

Iodine	*Acetylene, ammonia (aqueous or anhydrous), hydrogen*
Mercury	*Acetylene, ammonia*
Nitrates	*Sulphuric acid*
Nitric acid (concentrated)	*Acetic acid, hydrogen sulphide, flammable liquids and gases, copper, brass, any heavy metals*
Nitrites	*Acids*
Oxalic acid	*Silver, mercury*
Oxygen	*Oils, grease, hydrogen, flammable liquids, solids or gases*
Phosphorous (white)	*Air, oxygen, alkalis, reducing agents*
Potassium	*Carbon tetrachloride, carbon dioxide, water*
Potassium chlorate	*Sulphuric and other acids*
Silver	*Acetylene, oxalic acid, tartaric acid, ammonium compounds*
Sodium	*Carbon tetrachloride, carbon dioxide, water*
Sodium nitrite	*Ammonium nitrate and other ammonium salts*
Sodium peroxide	*Ethanol or methanol, glacial acetic acid, carbon disulphide, glycerine, methyl or ethyl acetate*

Sulphides	*Acids*
Sulphuric acid	*Potassium chlorate, potassium permanganate (similar compounds of light metals, such as sodium, lithium)*